UNIDIRECTIONAL, SOLENOID OPERATED OPENING, CARTRIDGE CHECK VALVE

Characteristics

TYPE	PORT SIZE	MAX FLOW	OPERATING PRESSURE	WEIGHT	STANDARD VOLTAGE	
VAS--12**	1/2" BSP	70 lt./min.	Max. 320 Bar	Kg. 0.37	DC 12-24-110 RAC	Other voltage on request

Description

Unidirectional pilot operated solenoid cartridge check valves. They allow perfect sealing in one direction and flow in the opposite one, when the solenoid is energized.
ON-OFF electric control.

Symbol

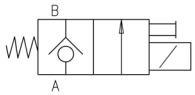

De-Energized	Energized
A ⊘ B	A → B
B → A	B → A

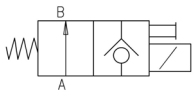

De-Energized	Energized
A → B	A ⊘ B
B → A	B → A

Dimensions

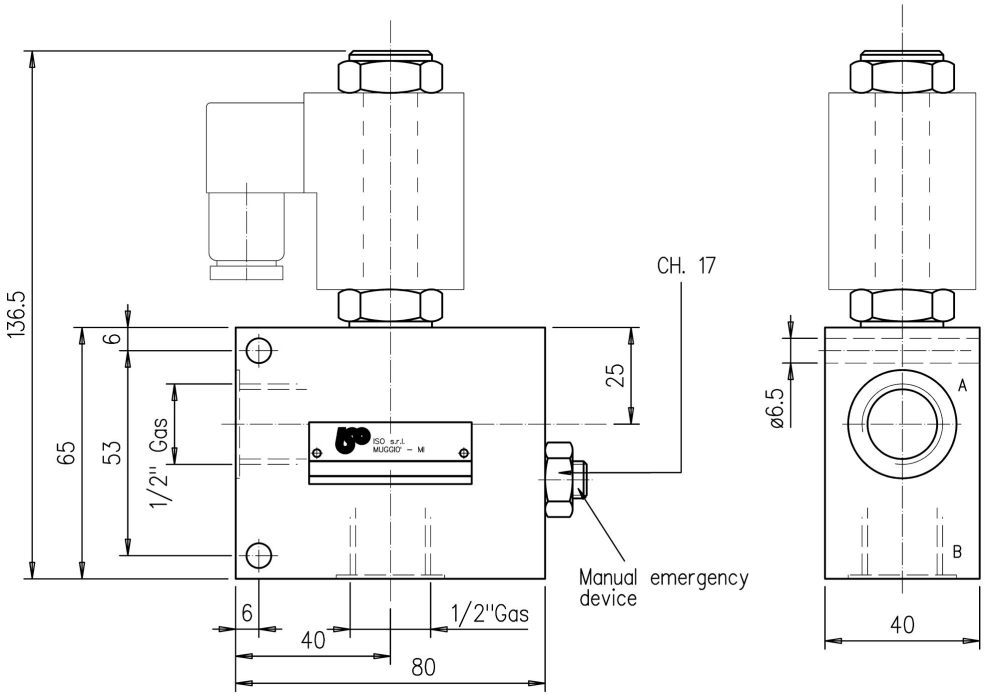

Installation rules

- The valves type VAS can be mounted in any direction
- Fluid to be used: hydraulic oil in compliance with DIN 51524 rules, viscosity between 30 and 100 mm^2/s (cSt) at 40°C
- Recommended filtration: 25µ
- Hydraulic fluid temperature: from -20° to +75°C
- Feeding voltage tolerance around -10% +5%

Diagram

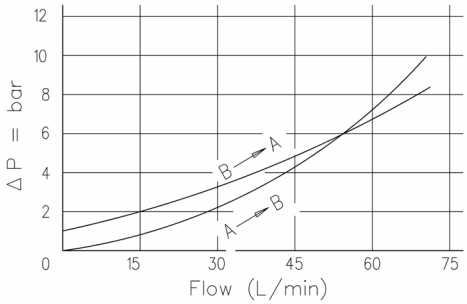

Ordering code

VAS - ** - 12

- 12 → 1/2" BSP ports
- ** → NC = normally closed NA = normally opened
- VAS → ON-OFF two-way cartridge valves